A 3D printed device for in vitro generation of stratified epithelia at the air-liquid interface

Hewitt, Benjamin John ; Batt, Joanna; Shelton, Richard; Cooper, Paul; Landini, Gabriel; Lucas, Robert ; Wiench, Malgorzata; Milward, Michael

DOI:
10.1089/ten.TEC.2022.0130

A 3D Printed Device for In Vitro Generation of Stratified Epithelia at the Air-Liquid Interface

Author Information:

Benjamin Hewitt [1]
Dr Joanna Batt [1]
Dr Richard M Shelton [1]
Professor Paul R Cooper [3]
Professor Gabriel Landini [1]
Dr Robert A Lucas [4]
Dr Malgorzata Wiench [1,2] *
Professor Michael R Milward [1] *

[1] School of Dentistry, Institute of Clinical Sciences, University of Birmingham, Birmingham, UK

[2] Institute of Cancer and Genomic Sciences, University of Birmingham, Birmingham, UK

[3] Department of Oral Sciences, Sir John Walsh Research Institute, Faculty of Dentistry, University of Otago, New Zealand

[4] GlaxoSmithKline Consumer Healthcare, Weybridge, UK

* Corresponding authors

This is the accepted version of the following article: Hewitt, B. J., Batt, J. M., Shelton, R. M., Cooper, P. R., Landini, G., Lucas, R. A., Wiench, M. D., & Milward, M. R. (2022). A 3D Printed Device for In Vitro Generation of Stratified Epithelia at the Air-Liquid Interface, which has now been formally published in final form at Tissue Engineering part C: Methods at https://doi.org/10.1089/ten.TEC.2022.0130. *This original submission version of the article may be used for non-commercial purposes in accordance with the Mary Ann Liebert, Inc., publishers' self-archiving terms and conditions*

Key Words

Air-liquid interface; Epithelial rafts; Fused filament fabrication; Oral mucosal equivalents; Stratified epithelial tissue

Running title:

Novel 3D printed ALI culture devices

Abstract

Air-liquid interface (ALI) cultures are used to produce stratified epithelial tissues *in vitro*, notably for the production of oral mucosal equivalents. Currently, there are few purpose-built devices which aim to enhance the ease and reproducibility of generating such tissue. Most ALI cultures utilise stainless steel grids or cell culture inserts to elevate the matrix or scaffold to the surface of the culture media. Here, a novel buoyant epithelial culture device (BECD) was designed to both contain a fibroblast-seeded collagen hydrogel and float in culture media, thereby automatically maintaining the ALI without further user intervention. BECDs aim to mitigate several issues associated with ALI culture; reducing the chance of media flooding the epithelial layer from physical disturbance, reducing technique-sensitivity for less experienced users, and improving the reproducibility of the epithelia generated. H400 oral squamous cell carcinoma cells cultured in BECDs for 7, 14 and 21 days showed continuous increase in epithelial tissue thickness with expected localisation of epithelial differentiation markers: cytokeratin 5, involucrin and E-cadherin. Fused filament fabrication 3D printing with polypropylene used in BECD production allows for rapid turnover and design iteration, presenting a versatile, adaptable and useful tool for application in *in vitro* cell culture.

Impact statement

Developing pharmaceuticals and improving understanding of cell biology requires biomimetic models, ranging from two-dimensional cell cultures to *in vivo* animal studies. Three-dimensional cultures provide a cellular architecture resembling *in vivo* tissue, with a reduced need for expensive and ethically questioned animal studies. This article outlines a 3D printed device for producing stratified epithelia typically found in cutaneous and mucosal tissues. These devices were designed to improve ease of use and reproducibility, while reducing cost compared with current methods and are shown to produce tissue with histological structure and differentiation similar to *in vivo* stratified epithelia.

1. Introduction

Stratified epithelial tissue is found in the epidermis, oral mucosa, cornea [1], urinary tract [2], oesophagus, and trachea [3]. Stratified epithelia typically form a homeostatic barrier; with the characteristic multi-layered structure protecting against UV radiation [4], forming a waterproof and abrasion-resistant layer [5] and providing both passive resistance and active immune response to bacterial ingress and colonisation [6]. Compromising the epithelium integrity may result in homeostatic imbalance and bacterial infection of the deeper tissues, as commonly seen in burn victims. Barrier function compromise also occurs during epithelial-mesenchymal transition, and is suggested as a pathogenic mechanism in periodontitis [7].

Stratified epithelia are separated from underlying connective tissue by a basement membrane (BM). Proliferative cells adjacent to the BM form the basal layer and give rise to a spinous cell layer [8] predominantly expressing cytokeratins 5 and 14 [9]. Cells obtain an increasingly mature phenotype while migrating away from the basal layer, differentiating further into granular and cornified cells predominantly expressing cytokeratins 1 and 10 [10]. The terminally differentiated cornified cell layer is most superficially located and provides resistance to physical and chemical attack, especially from abrasion, requiring that this layer is replenished by continued epithelial stratification [9]. Involucrin expression is a key marker of these terminally differentiated epithelial cells, forming a protein precursor for the insoluble cornified cell envelope [11,12].

The production of stratified epithelial tissue *in vitro* provides a useful model for studying the function of normal epithelium as well as the changes that accompany a wide range of epithelial diseases. This allows for more representative cytotoxicity and biocompatibility testing than is provided by simple monolayer cultures [13], as cell differentiation, morphology and signalling are shown to more closely represent cells or tissue *in vivo* when cultured organotypically [14,15]. For this reason, organotypic oral mucosal equivalents are considered more advanced in the study of cancers, periodontal disease, and high-throughput *in vitro* drug efficacy studies.

Air-liquid interface (ALI) cultures produce stratified epithelia *in vitro*, with a fibroblast-seeded matrix (or other supporting scaffold) submerged in media and keratinocyte layer exposed to air [16]. While the exact mechanism of ALI-induced stratification is unknown, this approach is widely understood to be an effective method to produce stratified epithelia. A proposed mechanism is that direct exposure to oxygen triggers oxidative stress, increasing cellular glutathione levels, promoting cell growth and differentiation [17].

Current ALI culture systems utilize Transwell inserts [18,19] or stainless steel mesh, raising the cell scaffold from the surface of the culture dish [16,20]. ALI maintenance requires frequent adjustments of media volume to account for evaporation and scaffold shrinkage due to fibroblast contraction. Variation in ALI may cause inconsistent differentiation or stratification, and mitigation of this is essential to maintain scientific rigour.

The use of a buoyant system could improve both the ease of generation and reproducibility of ALI culture by simultaneously retaining a fibroblast-seeded collagen hydrogel and maintaining the air-liquid interface.

2. Methods

2.1 Design considerations and requirements

The system comprises a BECD and submerging ring, both fabricated via a fused filament fabrication (FFF) process in polypropylene. The submerging ring is placed over the upper surface of the BECD, forcing the BECD under the culture media once the plate lid is applied. This allows for a period of submersion to enable the epithelial cells to grow to confluency, before removing the submerging ring and bringing the epithelium to the ALI.

Thermoplastics selected for such device are required to be non-cytotoxic and compatible with extrusion, sterilisation, and culture conditions. Potential materials were screened for a lack of reported cytotoxicity and a melting temperature suitable for FFF extrusion between 170-250°C. Three materials were chosen for initial characterisation: polypropylene (PP) [21,22], poly-lactic acid (PLA) [23,24] and polycarbonate (PC) [25,26]

Following initial printing trials, PP (BASF, Netherlands) was chosen for BECD fabrication in subsequent experiments. BECD design files are openly available and can be found in the supplemental materials.

2.2 Buoyant culture device design and fabrication

ALI culture devices were developed using a computer aided design (CAD) package (Fusion 360, Autodesk, USA) with an internal diameter of 15mm and outer diameter of 33mm. STL files for the devices were exported by slicing into .gcode format (Ultimaker Cura 4.6, Ultimaker, Netherlands). Engineering drawings and 3D renderings of the devices were generated within the same CAD package (Fusion 360, Autodesk, USA).

BECDs and submerging rings were fabricated on a bespoke FFF system with a brass 0.6mm diameter nozzle (E3D, United Kingdom), 0.5mm initial layer height, 0.32mm successive layer height, 40mm/s print speed, 240˚C extrusion temperature, and 80˚C bed in 1.75mm PP filament (UltraFuse / BASF, Netherlands). Three top layers and one skin layer were incorporated to reduce the risk of voids forming in the upper surface, which could allow media ingress. The heated borosilicate bed was covered with PP tape for increased part adhesion.

BECDs and submerging rings were immersed in 70% ethanol overnight to aid in removal of any build surface residue and begin the decontamination process prior to sterilisation (Figure 1A-C). 25mm wide Kapton tape (RS Electronics, UK) was applied across the base of the BECD to prevent leakage during the collagen matrix gelling process (Figure 1D). The submerging rings and BECDs – with tape *in* situ – were then autoclaved (MLS-3781L, Sanyo, Japan) at 121˚C, 101kPa for 15 minutes.

Cross section (Figure 3Ei), top-down (Eii) and isometric (Eiii) engineering drawings of the BECD are shown, depicting relevant dimensions and features. Corresponding views are also shown of the submerging ring (Fi-iii). A 3D rendering of the complete BECD with submerging ring *in-situ*, as would be used for the three day submersion period, is shown in Figure 3G.

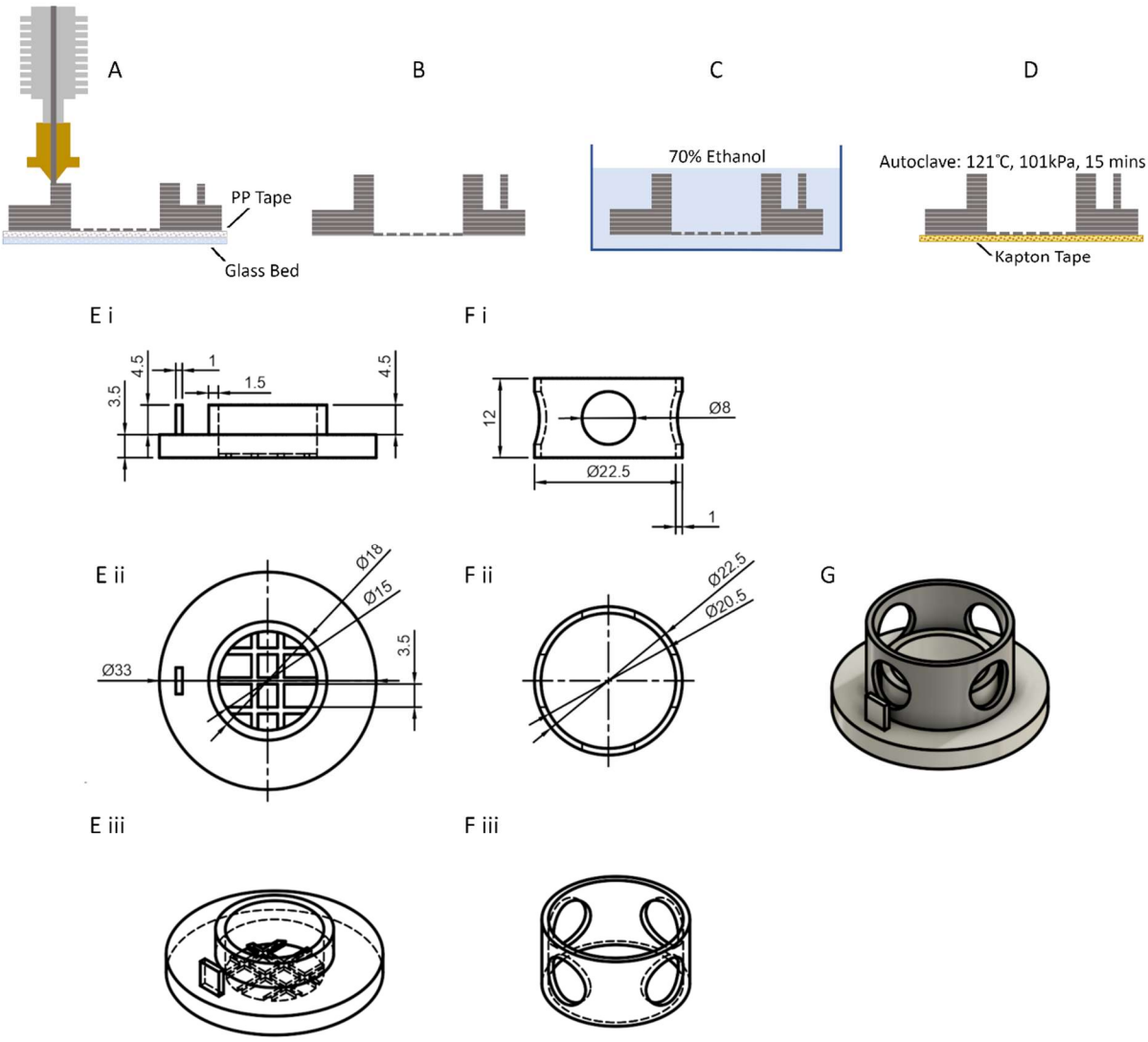

Figure 1. *Schematic diagrams and engineering drawings showing the BECD design and steps involved in the production and processing of 3D printed BECDs.*

(A) 3D printing via fused filament fabrication with polypropylene material on a heated borosilicate glass bed. Heated bed was coated in polypropylene (PP) tape for increased part adhesion.

(B) Construct with polypropylene (PP) tape removed.

(C) Immersion in 70% ethanol for removal of tape residue and initial decontamination.

(D) Addition of Kapton polyamide tape before sterilisation by autoclave. Kapton tape provided a sealing film, preventing the leakage of collagen solution prior to gelling.

E) Engineering drawings of the BECD construct with side (i), top (ii) and isometric (iii) views. All units shown in millimetres.

F) Engineering drawings of the submerging ring with side (i), top (ii) and isometric (iii) views. All units shown in millimetres.

G) 3D rendering of the BECD with submerging ring in place.

2.3 Cell culture

Murine 3T3 fibroblasts (ECACC 85022108) were cultured in Dulbecco's Modified Eagle Media (DMEM) (Gibco, UK) supplemented to final concentrations of 10% foetal calf serum (FCS) (Gibco, UK), 100 U/ml penicillin, 100 µg/ml streptomycin (both Gibco, UK) and 1 mM L-glutamine (ThermoFisher, UK).

H400 oral squamous cell carcinoma cells [27] (ECACC 06092006) were cultured in 1:1 Hams F12:DMEM, (Gibco, UK), supplemented as above.

Human tissues were sourced following ethical approval under NHS ethics 19/SW/0198, collected as waste from surgical procedures at Birmingham Dental Hospital and School of Dentistry, Birmingham, UK.

2.4 Production of stratified epithelia using BECDs

10x reconstitution buffer was prepared by addition of 1.1g $NaHCO_3$ and 2.385g HEPES (both Sigma Aldrich, UK) to 50 ml dH_2O. 10x DMEM and 10x reconstitution buffer were sterilised by passing through a 0.22µm syringe filter. 1ml 3mg/ml rat tail collagen (ThermoFisher, UK) was then added to 100 µl 10x DMEM (Gibco, UK) and 100 µl 10x reconstitution buffer. 1M NaOH was added dropwise to produce a pink coloured solution, at pH 6.9, measured using a Beckman Φ40 pH meter (Beckman Coulter, USA). Viable 3T3 fibroblasts were counted using a haemocytometer and trypan blue dye exclusion. 3T3 fibroblasts were added to the solution immediately after its preparation to a final concentration of $5x10^4$ cells/ml and the solution mixed well by pipetting on ice.

Devices were placed in 6-well plates and 1.2 ml buffered collagen solution with fibroblasts was added per BECD (Figure 2A). Devices were incubated at 37˚C, 5% CO_2 for 90 minutes until a firm gel had formed, Kapton tape was aseptically removed and devices were placed into a new 6-well plate (Figure 2B). 3ml DMEM was added to each well. The BECDs were then incubated at 37˚C, 5% CO_2 for 24 hours to allow initial growth of 3T3 fibroblasts (Figure 2C).

Culture medium was replaced with 2ml supplemented Hams F12:DMEM. H400 cells were counted and diluted to a final concentration of $8x10^4$ cells/ml, with 1 ml of suspension added to the upper gel surface, to a final 3ml total media volume. Submerging rings were placed on top of the BECDs submerging the devices once the plate lid was applied (Figure 2D), and incubated for 72 hours at 37˚C, 5% CO_2.

The submerging rings were removed and BECDs transferred to a plate containing 3 ml of Hams F12:DMEM per well. Removal of the submerging rings allowed the devices to float on the culture media, exposing the confluent H400 cell layer to air (Figure 2E). Devices were cultured at the ALI for 7, 14 or 21 days, with media changes every second day. Five independent biological replicates were produced, with two technical replicates (BECD cultured rafts) for each biological replicate and timepoint.

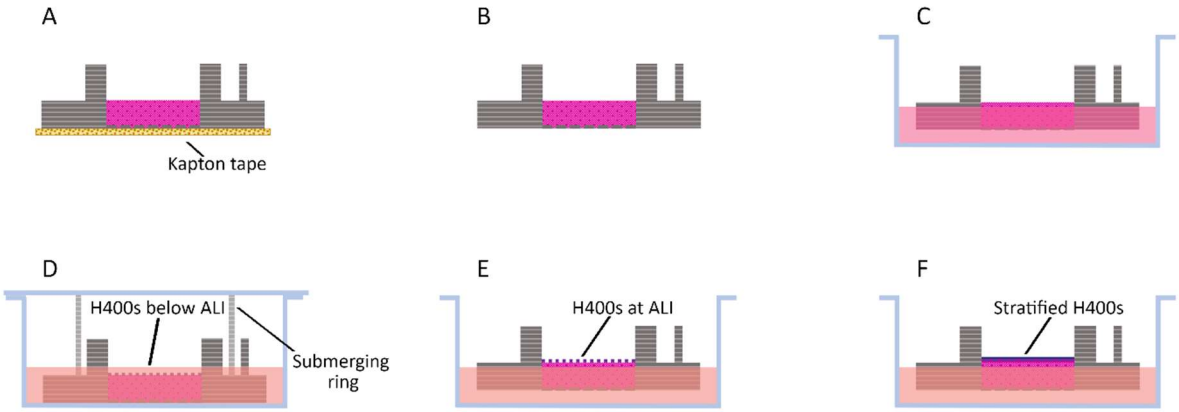

***Figure 2**. Steps applied for the use of BECDs in establishing a fibroblast-seeded collagen gel and seeding keratinocytes on the surface for stratification via ALI culture.*

(A) Addition of 1.2ml fibroblast seeded collagen. (B) 90 min incubation to allow for gelling, followed by removal of Kapton tape. (C) Overnight incubation in supplemented DMEM. (D) Addition of H400

cells onto surface to final concentration of $8x10^4$ cells/culture. 3-day submersed incubation using 3D printed forced submersion ring. (E) Removal of submersion ring to enable ALI culture. (F) Incubation at 37°C, 5% CO_2 to enable epithelial stratification. Diagrams are not to scale.

2.5 Histological processing

Hydrogels were fixed overnight at room temperature in 10% neutral buffered formalin (Surgipath Europe Limited, UK), and dehydrated in a series of graded ethanol from 10% to 100%, 10 minutes each. The 100% alcohol step was repeated three times, followed by 2x 10-minute immersions in xylene and 24hrs immersion in 60˚C histological paraffin wax. Samples were moved through two changes of paraffin wax at 60˚C before embedding and sectioning (4 µm sections) using a rotary microtome (RM2035, Leica Instruments, Germany). Sections were floated onto glass slides, heated in a 60°C oven for 1 hour, dewaxed in xylene and stained with haematoxylin and eosin (H&E), following standard protocols [28].

2.6 Immunofluorescence staining

Sections prepared as described above were dewaxed and cells permeabilised by exposure to 0.25% Triton X-100 (Sigma Aldrich, USA) in phosphate buffered saline (PBS), 10 minutes, at room temperature (RT), washed with PBS and blocked with goat serum (Sigma Aldrich, UK) diluted 1:5 in PBS for 10 minutes at RT. Primary antibodies (anti-E-Cadherin (rabbit mAb, Ab76319, anti-Involucrin (mouse mAb, Ab80530), anti-cytokeratin 5 (rabbit mAb, Ab52635)) were diluted 1:100 in PBST-BSA (10 mg/ml BSA in PBS with 0.1% Tween 20 (Sigma Aldrich, UK)) and incubated at RT for 1 hour. Samples were washed 3x in PBST for 5 minutes. Fluorophore-conjugated secondary antibodies were diluted either 1:200 (goat pAb anti-rabbit IgG, Ab150077) or 1:1000 (goat pAb anti-mouse IgG, Ab150113) with PBST-BSA supplemented to a final concentration of 10% type AB human plasma. Samples were incubated with secondary antibodies for 1 hour at RT, washed three times in PBST for 2 minutes each and mounted in Fluoroshield mounting media containing DAPI (Sigma Aldrich, UK. All antibodies were supplied by Abcam (Cambridge, UK). Samples were

imaged using a Zeiss LSM700 confocal microscope, maintaining the same imaging settings for all samples.

2.7 Image processing and analysis

Images were processed using Fiji [29], with the simple interactive object extraction (SIOX) plugin utilised for segmentation of the epithelial cell layer. A SIOX preset was generated and applied to all images, ensuring unbiased segmentation. Approximately 5% of SIOX-segmented images presented some regions with false-positive selection, and segmentation was manually modified in these cases for these regions only.

The SIOX image was then processed via a macro within Fiji, wherein any holes in the segmented epithelium were filled and the Euclidean Distance Transform (EDT) was used to compute the distance from each epithelial tissue pixel to the closest epithelial boundary (i.e. superficial or basal). Since the maximum value of the EDT occurs at the thickest location(s) in the epithelium and its position is equidistant to both superficial and basal tissue boundaries, the EDT value was multiplied by 2 to give the maximal epithelial thickness and a precalculated pixel:µm calibration factor applied to produce thickness measurements in micrometres.

2.8 Statistical Analysis

Statistical analyses were performed using GraphPad Prism 9.1.0 (GraphPad Software, San Diego, California USA). Biological replicates are presented as mean values with standard deviation. Statistical analysis of inter- and intra-replicate maximum epithelial thickness was performed using two-way ANOVA followed by Šídák's multiple comparisons test with significance level at $P<0.05$.

For each biological replicate, two devices were cultured per time point, established with the same population of cells to provide technical replicates.

Two slides were produced for each technical replicate at each time point, with one section obtained ~2 mm and a second section obtained ~10 mm from the block face. This approach was employed to identify any changes in epithelial thickness across the diameter of the hydrogel. Data from both

sections were incorporated into the final average for each biological replicate, giving four total technical replicates.

3. Experiment

3.1 Assessment of the suitability of polypropylene-based BECDs to maintain long term epithelial tissue culture.

Polypropylene (PP), polylactic acid (PLA), and polycarbonate (PC) were initially trialled for 3D printing of BECDs. PLA exhibited deformation immediately after sterilisation and embrittlement after prolonged cell culture (data not shown). PC was difficult to reliably print due to substantial issues with bed adhesion. The melting point of PP enabled both extrusion in consumer-grade FFF systems and autoclave sterilisation without deformation. PP withstood long periods of incubation at 37˚C without obvious embrittlement, structural failure, or media absorption. Polypropylene-based BECDs were therefore used for epithelial cultures supported by collagen hydrogels with embedded fibroblasts (Figure 3).

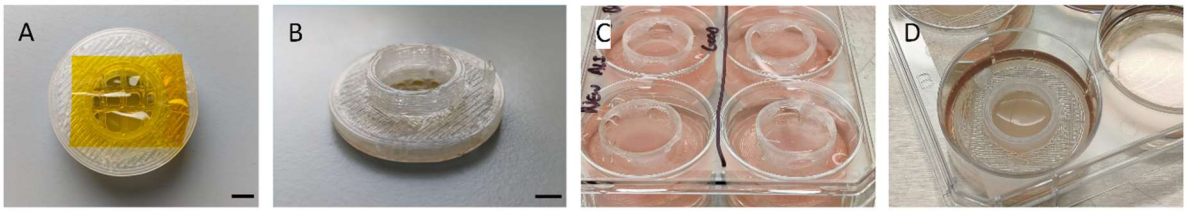

Figure 3*. Images of steps in production and use of BECDs for stratified epithelial culture. Scale bars are 5mm where shown.*

(A) BECD with Kapton tape in-situ, prior to sterilisation by autoclave – bottom view. (B) BECD with Kapton tape in-situ, perspective view. (C) BECDs in culture with submerging ring in place for 3-day submersed incubation step (Step D in Figure 2). (D) BECD following 21 days of ALI culture. Minimal media ingress to BECD structure was noted, with ALI well maintained.

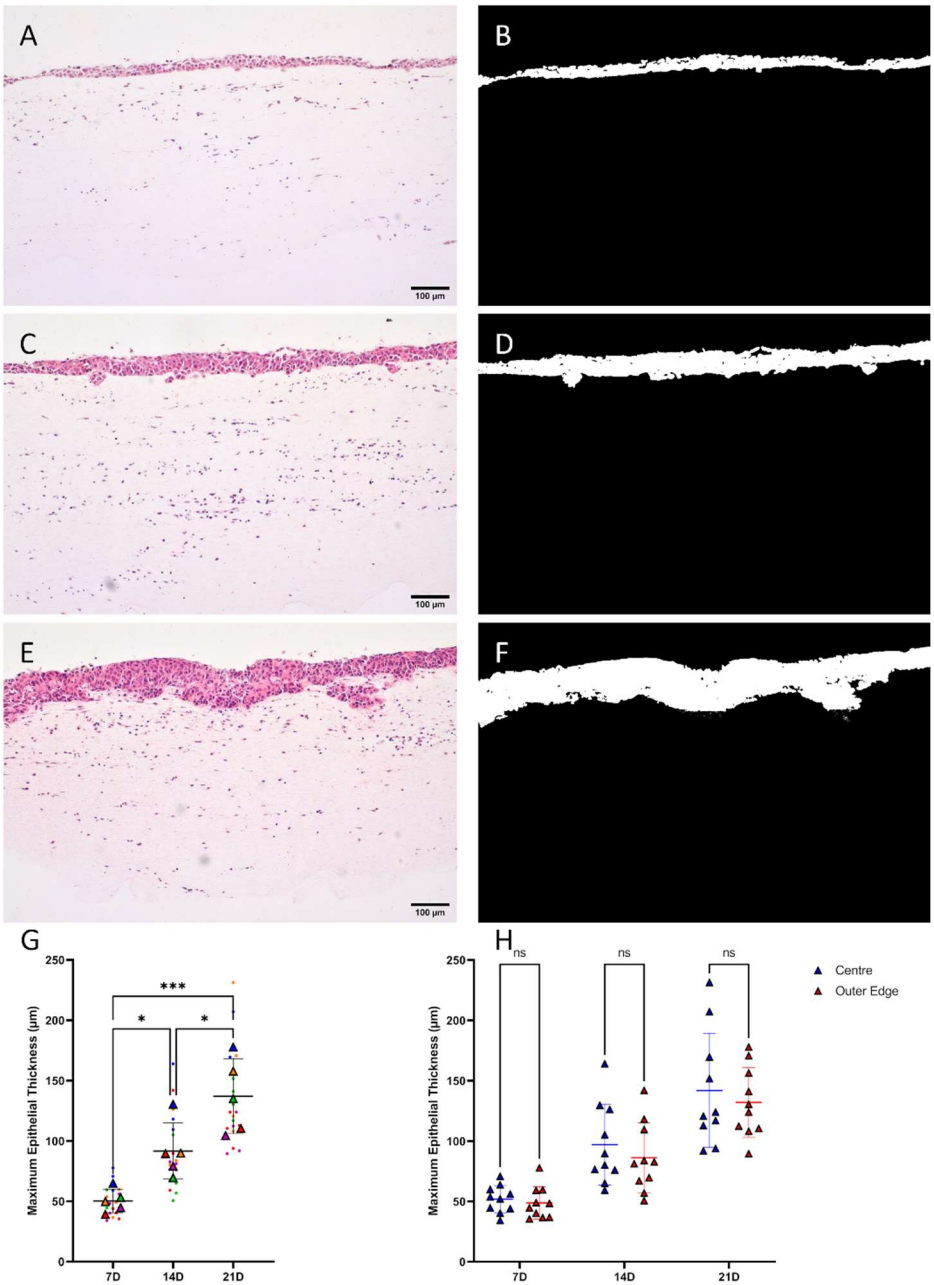

Figure 4. *A-F) Representative photomicrographs of H&E-stained sections of BECD-cultured H400 cells on a collagen-3T3 fibroblast gel for 7 (A), 14 (C) and 21 (E) days. The corresponding SIOX segmented image is shown for each micrograph shown on the right-hand side, isolating the layers of epithelium, white (B, D, E). Scale bars 100µm.*

G) Maximum epithelial thickness 'superplot' for H400 cells cultured at the ALI using BECDs. Biological replicates (triangle symbols) are colour matched to their respective technical replicates

*(small circle symbols). Statistical analysis performed via one-way ANOVA and Tukey's multiple comparisons test. * = P<0.05, ** = P<0.01, *** = P<0.001.*

N=5, 4 technical replicates per time point, standard deviation shown.

H) MET comparison between microtome sections from the inner region of the hydrogel (blue triangle symbols) and outer regions (red triangle symbols). Data include all technical replicates (N=5) from all biological replicates of H400 epithelia cultured using the BECD system. Statistical analysis performed using two-way ANOVA and Šídák's multiple comparisons test. Ns = no significance. Standard deviation shown.

BECD cultures using H400 cells and collagen-embedded 3T3 fibroblasts were established by immersion in media for 72h using the submerging ring (Figure 3A-C). After ring removal, the BECDs were allowed to float on the media surface at the ALI for 7, 14 and 21 days. The BECDs showed minimal media ingress and effective ALI maintenance, even after 21 days in culture (Figure 3D). Staining with H&E allowed for analysis and quantification of changes in epithelial thickness with time (Figure 4A, C, E). Importantly, both fibroblasts and epithelial cells were viable after 7, 14 and 21 days of ALI cultures confirming the low levels of cytotoxicity of polypropylene-based BECDs in *in vitro* culture systems [22,30].

Following 7 days of ALI culture, a thin stratified epithelium was visible on the upper surface of the collagen gel (Figure 4A-B). There was a qualitative increase in epithelial thickness from 7 to 14 days of ALI culture (Figure 4C-D) and a further marked increase from 14 to 21 days (Figure 4E-F), indicating an effective maintenance of ALI environment when using the BECDs. However, no keratinization was noted after 21 days of culture at the ALI. BECD-cultured H400 cells exposed to the ALI for 7 days showed some irregular stratification, which was noticeably reduced after 14 days

culture at the ALI. Fibroblasts could be observed throughout the collagen hydrogel and showed a visually homogenous distribution.

SIOX segmentation and thresholding of the H&E-stained micrographs enabled extraction of the epithelial tissue component with minimal false-positive selection when evaluated visually (Figure 4B, D, F). It presented a reproducible, objective approach for isolating and segmenting the epithelial tissue produced by BECDs, which was subsequently used to automate the process of epithelial thickness measurement.

3.2 Assessment of the reproducibility of BECD-grown epithelial tissue thickness.

The performance of BECDs was next characterised by quantification of epithelial thickness and assessment of inter- or intra-replicate variability. Five biological replicates were cultured for 7, 14 and 21 days. Following H&E staining and segmentation using SIOX, the maximal epithelial thickness (MET) of each sample was analysed using an automated macro procedure, reducing bias and improving measurement reproducibility.

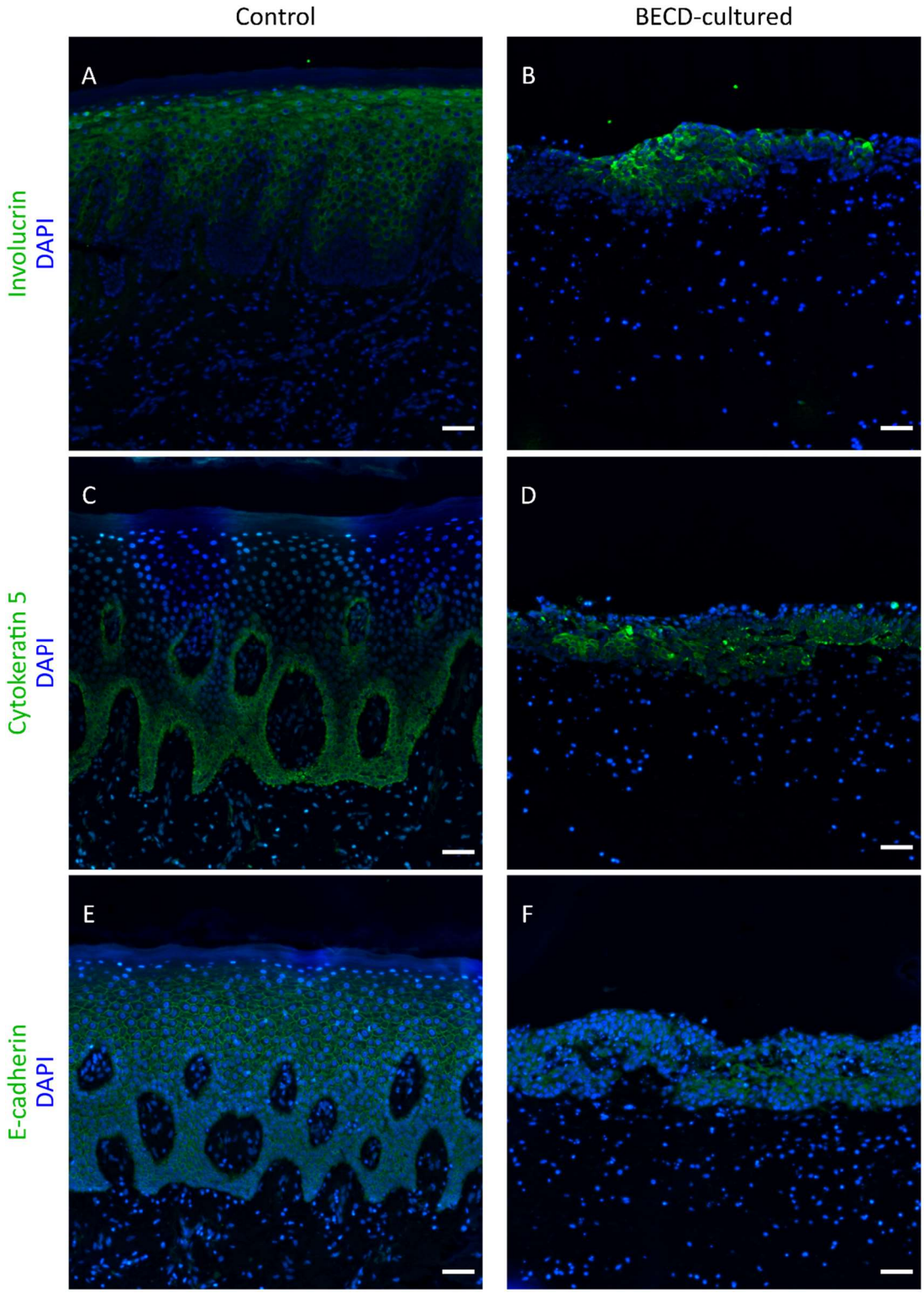

Figure 5. *Confocal images of control human gingival tissue (A, C, E) and epithelia cultured in BECDs for 21 days (B, D, F). Involucrin is present and localised to the upper layers of the epithelia in control (A) and BECD-cultured H400s (B). Inversely, cytokeratin 5 is localised to the bottom layers of both control (C) and BECD-cultured cells (D). E-cadherin is also localised to intercellular*

junctions in both images (E, F). AF488 (green) indicates protein of interest, with DAPI (blue) used as a nuclear counterstain. Scale bars: 50 µm.

There was a significant increase in MET from 7 to 14 days of culture ($P<0.05$), with an average MET of 50.34 µm, increasing to 91.66 µm after 14 days (Figure 4G). After 21 days, a further significant increase in MET was observed ($P<0.01$), with the average MET of 137.04 µm. The range of MET values in the technical replicates was seen to increase at 14 and 21 days of ALI culture and indicated more variability during prolonged periods of culture, as expected.

To identify possible variability in MET between the central (inner) region of the hydrogel and the outer edges, the sections were compared across the width of the BECD-cultured hydrogels (Figure 4H). No significant difference was observed between the MET values of inner and outer hydrogel sections at the tested timepoints ($P>0.05$).

These data indicate that the BECD system successfully produced a stratified epithelial tissue using H400 cells and 3T3 fibroblasts in a collagen matrix.

3.3 Qualitative assessment of epithelial markers' expression in BECD-cultured tissues.

Immunofluorescence staining allowed for a qualitative comparison of the localisation of key differentiation markers in tissue cultured using the BECD system compared with control human gingival tissue. Gingiva is a highly orthokeratinized tissue with a thick and distinct cornified layer and well demarcated spinous and granular layers. This provided a suitable positive control for assessing epithelial differentiation markers, although artificial organotypic cultures, especially using cancer cells, were not expected to develop such high level of maturation.

Involucrin, a key marker of epithelial cell differentiation, showed expression in both control tissue and BECD-cultured tissue by 21 days at the ALI (Figure 5). In control tissue, involucrin expression was localised to the upper layers of the stratified epithelia, with limited fluorescence detected in the

cells immediately above the basal epithelial cell layer. A similar pattern was seen in BECD-cultured tissue after 21 days at the ALI, with increased staining further from the basal layer. This localisation suggested terminal differentiation of the epithelial cells in BECD-cultured stratified epithelia was comparable with that observed *in vivo*. Cytokeratin 5 expression in control tissue was limited to cells immediately above the basal cell layer, decreasing as distance from the basal cell layer increased. Minimal expression was apparent in the uppermost cell layers. BECD-culture tissue showed a similar trend, with the upper-most layers of cells showing minimal cytokeratin 5 expression, whilst the cells adjacent to the basal layer showed highest expression. The transmembrane protein E-cadherin was selected as a marker of cell adhesion, with both control and BECD-cultured tissues showing staining for E-cadherin, localised to intraw3cellular junctions. Expression was consistent from the basal cell layers to the more superficial cornified layers. These data indicated that H400-derived epithelial tissue cultured using the BECD system showed similar differentiation patterns as the control gingival tissue.

4. Discussion

This study aimed to design, and assess the utility of, a novel device to produce epithelial tissue with easily fabricated devices and reduced technique-sensitivity compared with existing methodologies. The buoyant epithelial culture device (BECD) enabled (i) the establishment of epithelial cultures when submerged in media using the submerging ring, (ii) a smooth and easy transition to the ALI environment, and (iii) long term ALI cultures to be automatically maintained by floating on the media surface. BECDs considerably simplified typically highly technique-sensitive ALI culture, which has been shown to have high levels of inter-laboratory variability [31]. It is also hypothesised that ALI culture is likely to have problematic levels of inter-user variability due to its technique sensitivity. Use of the BECDs resulted in a growth of stratified epithelial tissues comparable with those obtained using traditional ALI methodologies including Transwell inserts [32,33] or stainless steel mesh to raise the culture rafts [16,34].

Previous work employing ALI-cultured H400 cells on a raised collagen gel demonstrated a similar epithelial tissue morphology and architecture following H&E staining compared with that presented in this study [10]. Similarly, it also showed no evidence of keratinization of H400 cells following 21 days of ALI culture with conventional techniques on a relatively basic collagen hydrogel, suggesting that the scaffold used has some determination on the final level of epithelial maturation. Modification of this scaffold material to more closely mimic epithelial dermis may be beneficial if this maturation is necessary or desired.

An epithelial layer of increasing thickness from 7 to 14, and 14 to 21 days of culture was apparent (Figure 4), whilst SIOX quantification provided a rapid, unbiased thresholding and segmentation technique to quantify the thickness of these epithelial cultures. BECDs did not appear to exert any cytotoxic effect on the cells, as cultures showed appropriate stratification and no marked changes in morphology. Additionally, the absence of a significant difference in MET between epithelia at the outer edge and inner sections of the hydrogels suggested that epithelial thickness was constant across the width of the raft.

The thickness of the produced epithelial tissues demonstrated good reproducibility within both technical and biological repeats, which could be attributed to the consistent ALI maintenance in BECDs. A small increase in variability between replicates was noted at 14 and 21 days of culture, likely due to the shrinkage of the fibroblast-collagen matrix pulling some regions of epithelia below the ALI. Further work may identify a more dimensionally stable hydrogel replacement, reducing shrinkage in long term cultures [35]. Variability may also be reduced further by optimising print settings, leading to fewer voids through which media ingress may occur after prolonged submersion. The nature of FFF as a layer-by-layer additive manufacturing process means that water-tight components can prove challenging to fabricate. Higher resolution 3D printers and smaller diameter nozzles are likely to provide an improvement and reduce variability even further.

Immunofluorescence staining allowed for a qualitative assessment of the expression and localisation of key epithelial markers. These were all detected in the cultured epithelial tissue, indicating that the differentiation shown in BECD-cultured tissue was similar to that of the control tissue. Involucrin expression in both control tissue and BECD-cultured tissue was localised predominantly to the uppermost layers of the stratified epithelium, a finding consistent with previous reports [11,36]. Involucrin is a widely used marker of terminal epithelial differentiation, playing a key role in barrier function in healthy epithelia [37], suggesting this function was likely to be maintained in these BECD-cultured tissues as observed *in vivo.*

Expression of cytokeratin 5 was noted in BECD-cultured epithelial tissues, with maximal expression in the basal cells, though this localisation was not as clearly defined in cultured samples as in control tissue. These data, however, indicate that localisation of cytokeratin 5 was similar to that of *in vivo* tissues.

E-cadherin has been shown to be crucial for normal cell adhesion processes, spanning the intracellular space and providing a junction between adjacent cells via its transmembrane domains [38]. E-cadherin expression was observed in BECD-cultured tissue, providing evidence that cell adhesion was maintained as observed in control tissues. As with cytokeratin 5 expression, E-cadherin expression in BECD-cultured tissue was not as clearly demarcated and localised as in control tissue. However,

some variation is expected when using ALI-based systems, which are relatively simple compared with the complex *in vivo* environment.

It is notable that correctly stratified epithelia were developed despite the use of the H400 cell line, which was derived from an alveolar process squamous cell carcinoma. The immortal, rapidly dividing nature of this cell line is useful for research purposes, however the differentiation and architectural arrangement of these cancer cells varies from the primary healthy human tissue [27].

The BECD system is easily adaptable, allowing for rapid, reliable induction of ALI in any volume of culture media. A buoyant, self-levelling device is likely to reduce technique sensitivity with the possibility of improved reproducibility compared with conventional methodologies, improving the suitability of the BECD system for high-throughput applications. The system is more economical than Transwell devices, with each BECD costing a fraction of these commercially available devices. Raw material cost for a complete system of a single BECD and submerging ring is in the order of $0.05 per device, a cost ~20x less than a similar Transwell system. Polypropylene is readily available for use in FFF printers, providing a suitable mix of both material properties and low cytotoxicity. The combination of CAD and FFF technologies allows for modification to include inserts or measurement probes, for example trans-epithelial electrical resistance readings for barrier function assessment. FFF has seen increasing use in the laboratory with a move to more 'open' and accessible approaches to science, often employed as a step in the production of *in vitro* devices [39,40], or for direct use *in vitro*, as described here.

In addition, 3D bioprinting has been employed for use in developing tissue constructs and models [41,42], though these approaches are markedly different than producing *in vitro* culture devices from polymers.

In summary, BECDs provide an economical approach to ALI culture with the potential to reduce variability within ALI-cultured tissues. BECDs may be used to elucidate the mechanisms of epithelial tissue disorders, or trial drug candidates in a more realistic system than standard monolayer culture, with application to periodontal disease, epithelial tissue disorders and oral cancers. The system may

be used for the generation of other ALI-cultured tissues by modification of the cell types used, including cutaneous and bronchial epithelial tissues [18]. In addition to *in-vitro* studies, the BECD system may also find utility in clinical tissue engineering applications, due to the versatility and ease of generation of stratified epithelial tissue. The devices may be increased in scale to be used for the generation of oral mucosal equivalents for use *in vivo,* for example replacing tissue lost to trauma, disease, or surgical intervention.

5. Conclusion

The BECD system is a novel methodology for the production of stratified epithelial tissue with similar morphology and differentiation characteristics to *in vivo* tissue. Statistically significant epithelial stratification was noted between 7, 14 and 21 days of ALI culture. Key markers of epithelial differentiation and maturity were present and localised to regions of the epithelia that resembled control human tissue. These novel devices effectively produced epithelial tissue with reduced cost in comparison with current methods, in both financial input and researcher time. FFF is a suitable fabrication technique for these devices, employing a material with appropriate biological and material characteristics, whilst printing the devices at a scale suited to laboratory-based tissue culture. The devices have the potential for use in a wide range of *in vitro* studies of periodontal disease or oral cancer, and may also be modified to be used clinically to produce tissue equivalents for trauma victims.

6. Acknowledgements

The authors thank Dr Lauter Eston Pelepenko for his time and support proof-reading this document.

7. Authorship Contribution Statement

BH: Conceptualization (lead); methodology (lead); investigation (lead); writing – original draft (lead); writing – review and editing (lead)

JB: Investigation (supporting); writing – review and editing (supporting)

RMS and PRC: Writing – review and editing (supporting); supervision (supporting)

GL: Formal analysis (supporting)

RAL: Supervision (supporting); writing – review and editing (supporting)

MW and MRM: Supervision, lead (equal); project administration, lead (equal); writing – review and editing, supporting.

8. Conflict of Interest Statement

The authors have no competing financial interests or personal relationships that may cause a conflict of interest.

9. Funding Sources

This work was jointly supported by the Biotechnology and Biological Sciences Research Council (BBSRC) [reference BB/T508329/1], and GlaxoSmithKline as part of an iCASE PhD studentship.

10. References

1. Gonzalez-Andrades M, Alonso-Pastor L, Mauris J, et al. Establishment of a Novel in Vitro Model of Stratified Epithelial Wound Healing with Barrier Function. Sci Rep 2016;6(1):1–9; doi: 10.1038/srep19395.
2. Sun T-T. Altered Phenotype of Cultured Urothelial and Other Stratified Epithelial Cells: Implications for Wound Healing. Am J Physiol Physiol 2006;291(1):F9–F21; doi: 10.1152/ajprenal.00035.2006.
3. Porter RM, Lunny DP, Ogden PH, et al. K15 Expression Implies Lateral Differentiation within Stratified Epithelial Basal Cells. Lab Investig 2000;80(11):1701–1710; doi: 10.1038/labinvest.3780180.
4. Natarajan VT, Ganju P, Ramkumar A, et al. Multifaceted Pathways Protect Human Skin from UV Radiation. Nat Chem Biol 2014;10(7):542–551; doi: 10.1038/nchembio.1548.
5. Steinert PM. The Complexity and Redundancy of Epithelial Barrier Function. J Cell Biol 2000;151(2):5–7; doi: 10.1083/jcb.151.2.f5.
6. Presland RB and Jurevic RJ. Making Sense of the Epithelial Barrier: What Molecular Biology and Genetics Tell Us About the Functions of Oral Mucosal and Epidermal Tissues. J Dent Educ 2002;66(4):564–574; doi: 10.1002/j.0022-0337.2002.66.4.tb03536.x.
7. Abdulkareem AA, Shelton RM, Landini G, et al. Periodontal Pathogens Promote Epithelial-Mesenchymal Transition in Oral Squamous Carcinoma Cells in Vitro. Cell Adhes Migr 2018;12(2):127–137; doi: 10.1080/19336918.2017.1322253.
8. Lechler T and Fuchs E. Asymmetric Cell Divisions Promote Stratification and Differentiation of Mammalian Skin. Nature 2005;437(7056):275–280; doi: 10.1038/nature03922.

9. Koster MI and Roop DR. Mechanisms Regulating Epithelial Stratification. Annu Rev Cell Dev Biol 2007;23(1):93–113; doi: 10.1146/annurev.cellbio.23.090506.123357.

10. Khan E, Shelton RM, Cooper PR, et al. Architectural Characterization of Organotypic Cultures of H400 and Primary Rat Keratinocytes. J Biomed Mater Res - Part A 2012;100 A(12):3227–3238; doi: 10.1002/jbm.a.34263.

11. Watt FM. Involucrin and Other Markers of Keratinocyte Terminal Differentiation. J Invest Dermatol 1983;81(1):S100–S103; doi: 10.1111/1523-1747.EP12540786.

12. Banks-Schlegel S and Green H. Involucrin Synthesis and Tissue Assembly by Keratinocytes in Natural and Cultured Human Epithelia. J Cell Biol 1981;90(3):732–737; doi: 10.1083/JCB.90.3.732.

13. Pezzulo AA, Starner TD, Scheetz TE, et al. The Air-Liquid Interface and Use of Primary Cell Cultures Are Important to Recapitulate the Transcriptional Profile of in Vivo Airway Epithelia. Am J Physiol - Lung Cell Mol Physiol 2011;300(1):25–31; doi: 10.1152/ajplung.00256.2010.

14. Breslin S and O'Driscoll L. The Relevance of Using 3D Cell Cultures, in Addition to 2D Monolayer Cultures, When Evaluating Breast Cancer Drug Sensitivity and Resistance. Oncotarget 2016;7(29):45745; doi: 10.18632/ONCOTARGET.9935.

15. Tatara T, Mukohara T, Tanaka R, et al. 3D Culture Represents Apoptosis Induced by Trastuzumab Better than 2D Monolayer Culture. Anticancer Res 2018;38(5); doi: 10.21873/anticanres.12528.

16. Prunieras M, Regnier M and Woodley D. Methods for Cultivation of Keratinocytes with an Air-Liquid Interface. J Invest Dermatol 1983;81(1 Suppl.):S28–S33; doi: 10.1111/1523-1747.ep12540324.

17. Kameyama S, Kondo M, Takeyama K, et al. Air Exposure Causes Oxidative Stress in Cultured Bovine Tracheal Epithelial Cells and Produces a Change in Cellular Glutathione Systems. http://dx.doi.org/101080/01902140390240113 2009;29(8):567–583; doi: 10.1080/01902140390240113.

18. Lin H, Li H, Cho HJ, et al. Air-Liquid Interface (ALI) Culture of Human Bronchial Epithelial Cell Monolayers as an in Vitro Model for Airway Drug Transport Studies. J Pharm Sci 2007;96(2):341–350; doi: 10.1002/jps.20803.

19. Aufderheide M and Mohr U. CULTEX - An Alternative Technique for Cultivation and Exposure of Cells of the Respiratory Tract to Airborne Pollutants at the Air/Liquid Interface. Exp Toxicol Pathol 2000;52(3):265–270; doi: 10.1016/S0940-2993(00)80044-5.

20. Bernstam LI, Vaughan FL and Bernstein IA. Keratinocytes Grown at the Air-Liquid Interface. Vitr Cell Dev Biol - Anim 1986;22(12):695–705; doi: 10.1007/bf02621086.

21. Fatou JG. Melting Temperature and Enthalpy of Isotactic Polypropylene. Eur Polym J 1971;7(8):1057–1064; doi: 10.1016/0014-3057(71)90138-8.

22. Roy S and Fleischman AJ. Cytotoxicity Evaluation of Microsystems Materials Using Human Cells. Sensors Mater 2003;15(6):335–340.

23. Garlotta D. A Literature Review of Poly(Lactic Acid). J Polym Environ 2001 92 2001;9(2):63–84; doi: 10.1023/A:1020200822435.

24. Tsou CH, Yao WH, Lu YC, et al. Antibacterial Property and Cytotoxicity of a Poly(Lactic Acid)/Nanosilver-Doped Multiwall Carbon Nanotube Nanocomposite. Polym 2017, Vol 9, Page 100 2017;9(3):100; doi: 10.3390/POLYM9030100.

25. Greene JP. Microstructures of Polymers. Automot Plast Compos 2021;27–37; doi:

10.1016/B978-0-12-818008-2.00009-X.

26. Melo Pithon M, Lacerda R, Santos D, et al. Cytotoxicity of Polycarbonate Orthodontic Brackets. Brazilian J Oral Sci 2009;8(2):84–87; doi: 10.20396/BJOS.V8I2.8642232.

27. Prime S, Nixon S, Crane I, et al. The Behaviour of Human Oral Squamous Cell Carcinoma in Cell Culture. J Pathol 1990;160(3):259–269; doi: 10.1002/PATH.1711600313.

28. Feldman AT and Wolfe D. Tissue Processing and Hematoxylin and Eosin Staining. Methods Mol Biol 2014;1180:31–43; doi: 10.1007/978-1-4939-1050-2_3.

29. Schindelin J, Arganda-Carreras I, Frise E, et al. Fiji: An Open-Source Platform for Biological-Image Analysis. Nat Methods 2012;9(7):676–682; doi: 10.1038/nmeth.2019.

30. Ikarashi Y, Tsuchiya T and Nakamura A. Cytotoxicity of Medical Materials Sterilized with Vapour-Phase Hydrogen Peroxide. Biomaterials 1995;16(3):177–183; doi: 10.1016/0142-9612(95)92115-M.

31. Barosova H, Meldrum K, Karakocak BB, et al. Inter-Laboratory Variability of A549 Epithelial Cells Grown under Submerged and Air-Liquid Interface Conditions. Toxicol Vitr 2021;75; doi: 10.1016/J.TIV.2021.105178.

32. Rosdy M and Clauss LC. Terminal Epidermal Differentiation of Human Keratinocytes Grown in Chemically Defined Medium on Inert Filter Substrates at the Air-Liquid Interface. J Invest Dermatol 1990;95(4):409–414; doi: 10.1111/1523-1747.ep12555510.

33. Wang H, He L, Liu B, et al. Establishment and Comparison of Air-Liquid Interface Culture Systems for Primary and Immortalized Swine Tracheal Epithelial Cells. BMC Cell Biol 2018;19(1):1–10; doi: 10.1186/s12860-018-0162-3.

34. Bernstam LI, Vaughan FL and Bernstein IA. Stratified Cornified Primary Cultures of Human Keratinocytes Grown on Microporous Membranes at the Air-Liquid Interface. J Dermatol Sci 1990;1(3):173–181; doi: 10.1016/0923-1811(90)90129-2.

35. Bacakova M, Pajorova J, Broz A, et al. A Two-Layer Skin Construct Consisting of a Collagen Hydrogel Reinforced by a Fibrin-Coated Polylactide Nanofibrous Membrane. Int J Nanomedicine 2019;14:5033; doi: 10.2147/IJN.S200782.

36. Ekanayake-Mudiyanselage S, Aschauer H, Schmook FP, et al. Expression of Epidermal Keratins and the Cornified Envelope Protein Involucrin Is Influenced by Permeability Barrier Disruption. J Invest Dermatol 1998;111(3):517–523; doi: 10.1046/J.1523-1747.1998.00318.X.

37. Ye P, Chapple CC, Kumar RK, et al. Expression Patterns of E-Cadherin, Involucrin, and Connexin Gap Junction Proteins in the Lining Epithelia of Inflamed Gingiva. J Pathol 2000;192(1):58–66; doi: 10.1002/1096-9896(2000)9999:9999<::AID-PATH673>3.0.CO;2-T.

38. Van Roy F and Berx G. The Cell-Cell Adhesion Molecule E-Cadherin. Cell Mol Life Sci 2008;65(23):3756–3788; doi: 10.1007/s00018-008-8281-1.

39. Yang L, Shridhar SV, Gerwitz M, et al. An in Vitro Vascular Chip Using 3D Printing-Enabled Hydrogel Casting. Biofabrication 2016;8(3):035015; doi: 10.1088/1758-5090/8/3/035015.

40. Herreros-Pomares A, Zhou X, Calabuig-Fariñas S, et al. 3D Printing Novel in Vitro Cancer Cell Culture Model Systems for Lung Cancer Stem Cell Study. Mater Sci Eng C 2021;122; doi: 10.1016/J.MSEC.2021.111914.

41. Samavedi S and Joy N. 3D Printing for the Development of in Vitro Cancer Models. Curr Opin Biomed Eng 2017;2:35–42; doi: 10.1016/J.COBME.2017.06.003.

42. Vanderburgh J, Sterling JA and Guelcher SA. 3D Printing of Tissue Engineered Constructs for In Vitro Modeling of Disease Progression and Drug Screening. Ann Biomed Eng 2016 451

2016;45(1):164–179; doi: 10.1007/S10439-016-1640-4.